QS Split Case Pump



An Pump Machinery is the pump factory approved by ISO9001, ISO14001 and OHSAS18001. We also have the certificate of CE. Our factory is over 50,000 square meters with the professional engineer over 20. The Max casting parts weight we could do one time is 7 tons. And we have capacity to produce 600 tons per month and with the heat treatment furnace dimension 6mx5.5mx2.5m. The Max parts we could machine is 6.4 meters and we have capacity to assemble the pump over 1800mm and our cranes capacity is 30 tons.

The Selection Charts (1)
2950r/min

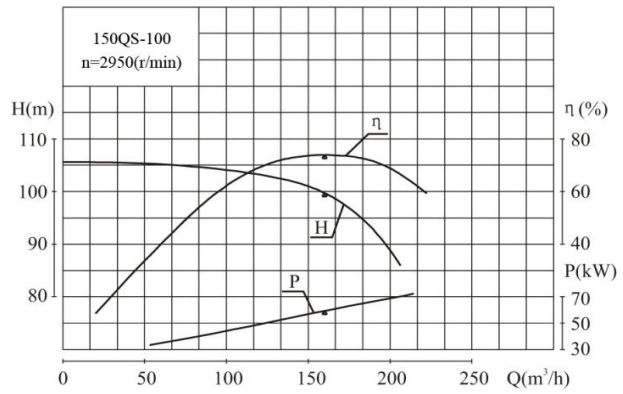

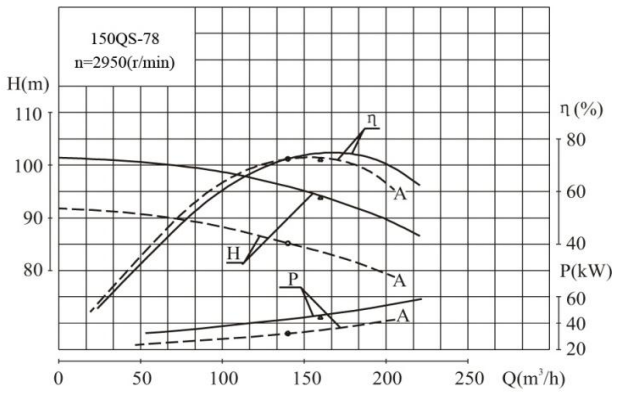

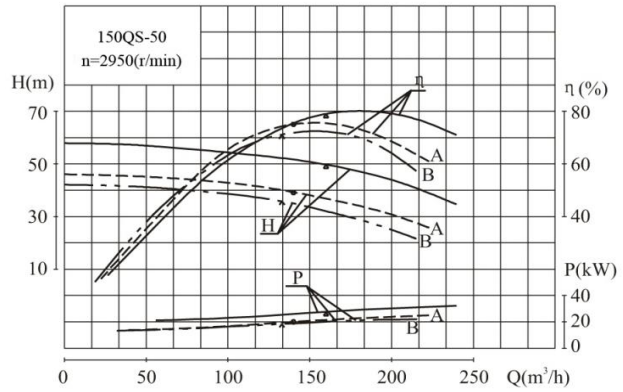

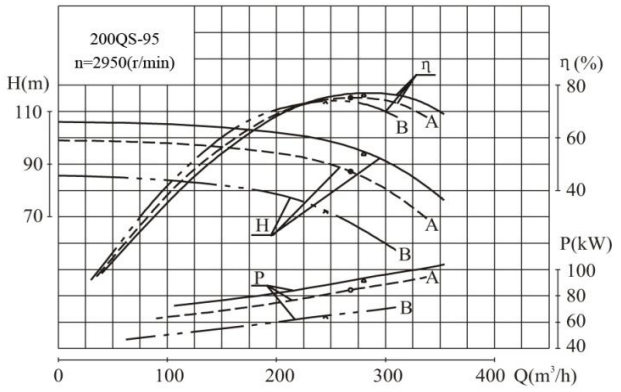

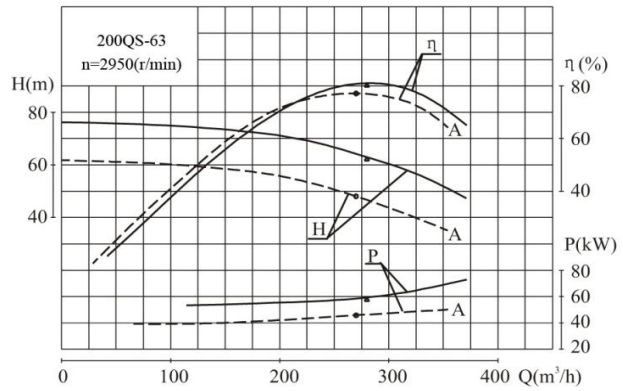

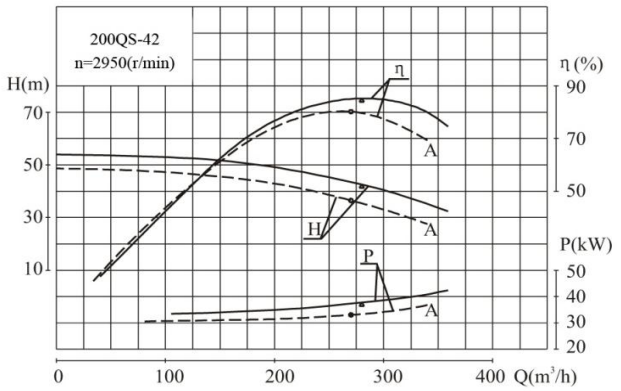

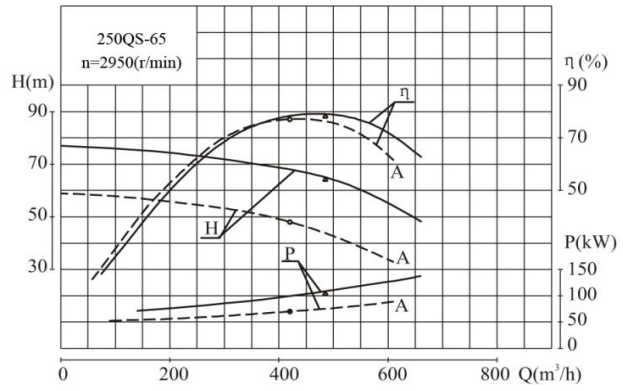

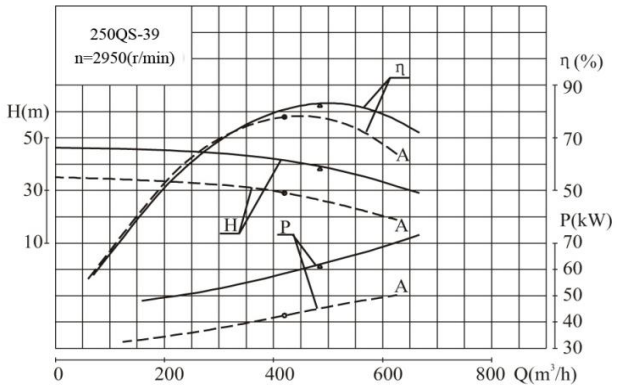

The Selection Charts
1480r/min

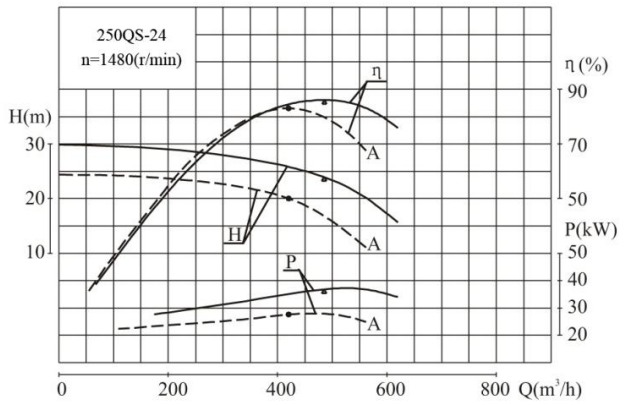

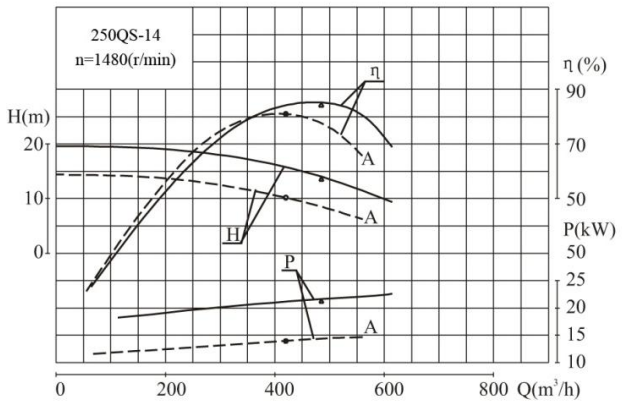

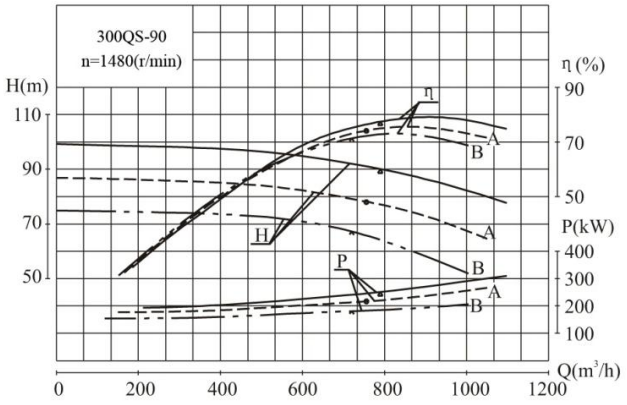

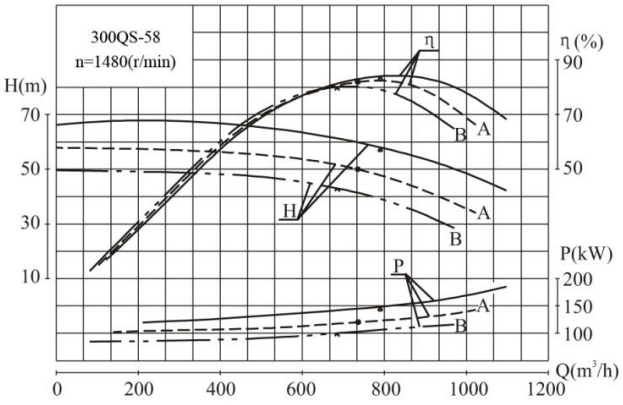

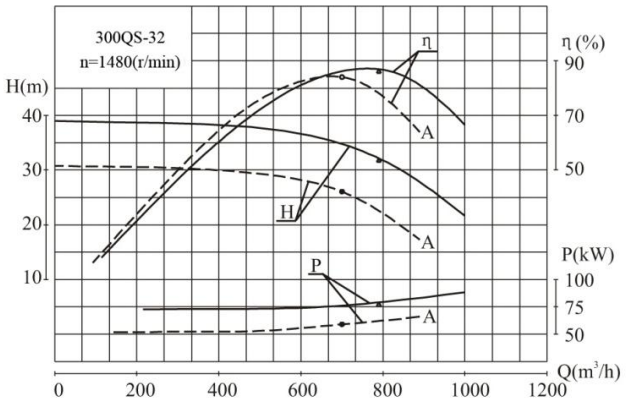

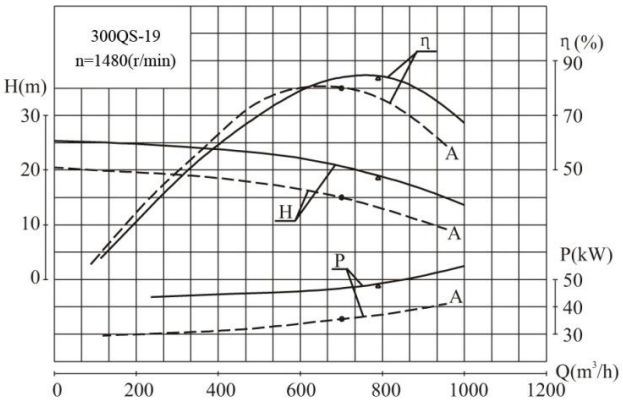

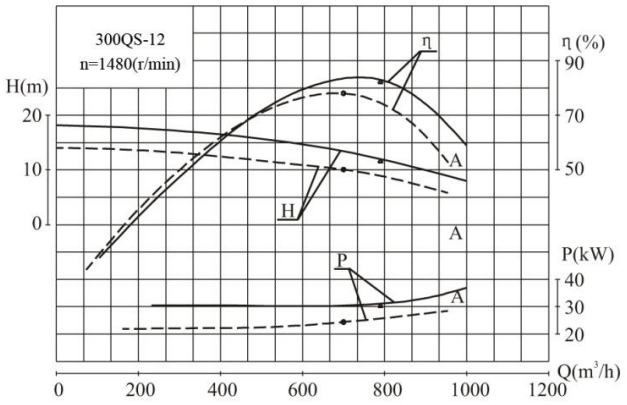

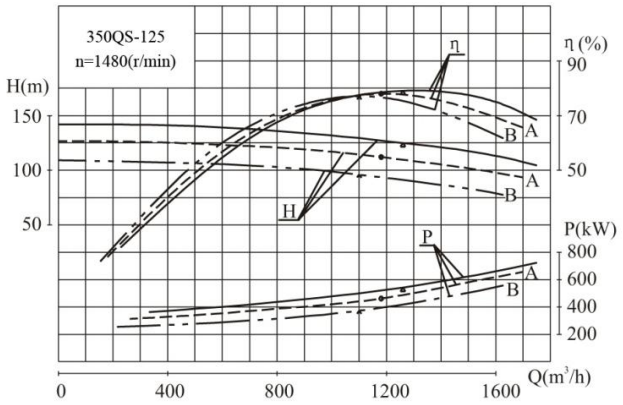

Model QS pump is a single-stage double-suction horizontal split centrifugal pump and used to transport pure water and the liquid of both physical and chemical nature similar to those of water, the maximum temperature of which must not be over 80℃ , suitable for water supply and drainage in factories, mines, cities and electric stations, waterlogged land drainage and irrigation of farming land and carious hydraulic projects.
This series pump comply with the standards of GB/T3 216 and GB/T5657.

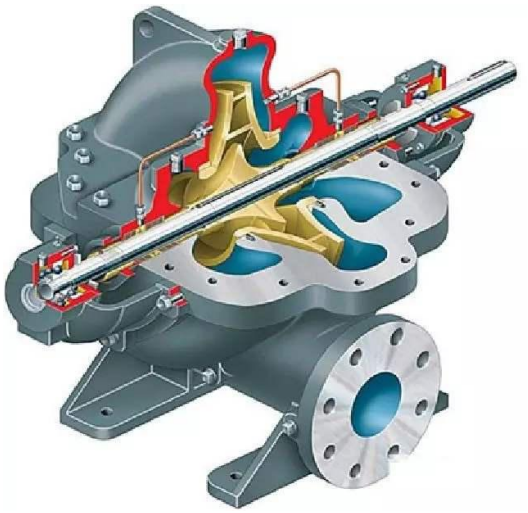

Feature & Application

The QS Pump can handle the liquid corrosive and the viscosity similar to clean water.
It could be coupled with cooling system for high temperature medium.



General Industry
Marine
Mining & Aggregate
Oil & Gas
Water & Wastewater

Size: 150 mm – 1200 mm

Flow: 120 m3/h – 14400 m3/h

Head: 6m – 140m

The pump supported in gland packing seal and different type of mechanical seals widly used in chemical, petroleum, metallurgy, power, paper making, food, pharmacy and synthetic fiber etc..

Model:

150 QS - 78 A

- A: Cut the impeller samller
- 78: Discharge head
- QS: Split case pump
- 150: Inlet Diameter

Overall and Dimensions Figure

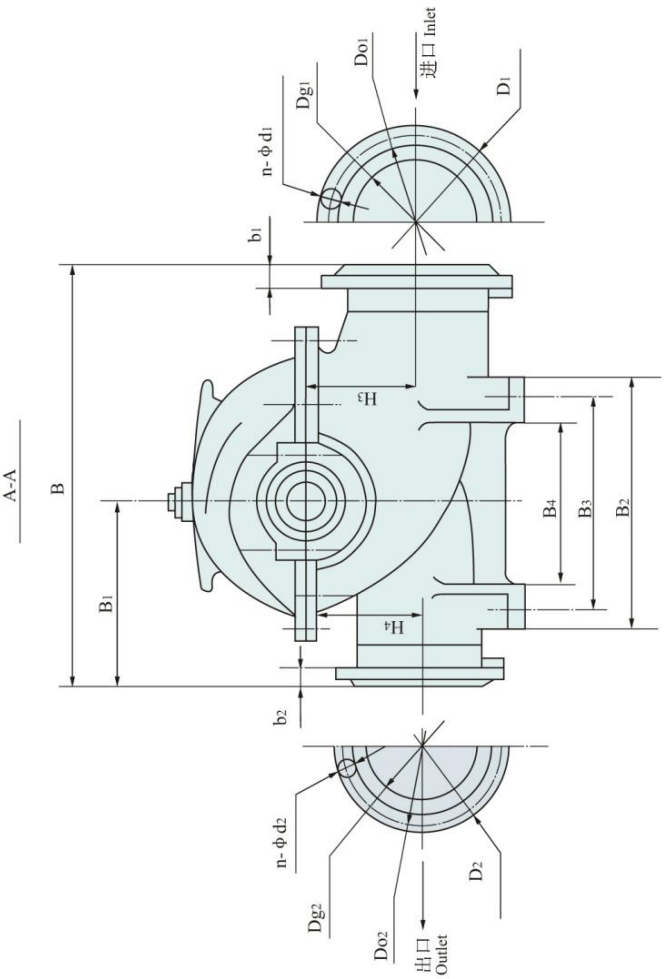

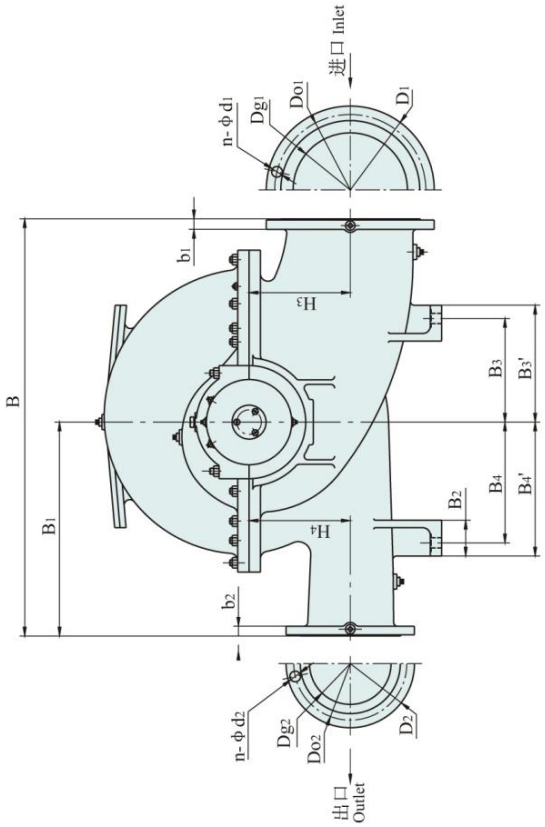

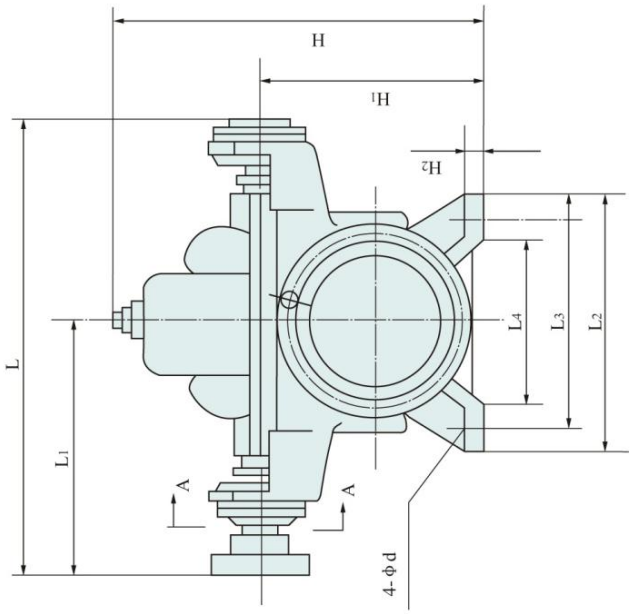

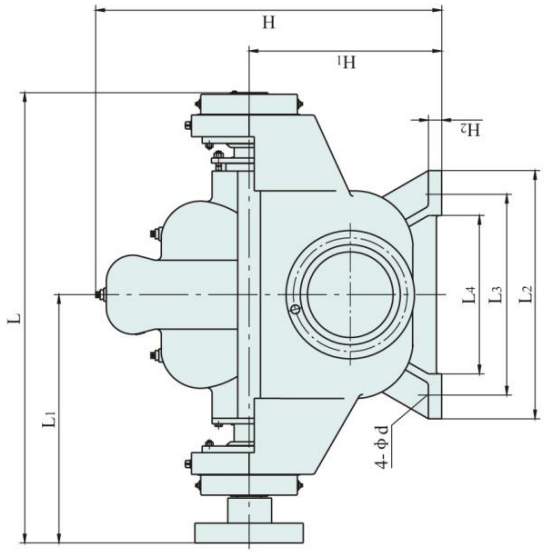

单位 Unit：mm

型 号 Type	泵外形尺寸 Pump figure dimensions																		进水法兰尺寸 Inlet flange dimensions					出水法兰尺寸 Outlet flange dimensions				
	L	L1	L2	L3	L4	B	B1	B2	B3	B3'	B4	B4'	H	H1	H2	H3	H4	4-φd	Dg1	Do1	D1	b1	n-φd1	Dg2	Do2	D2	b2	n-φd2
150QS-100	740.5	410	330	280	190	550	250	330	280	-	190	-	490	285	25	140	170	4-φ18	150	240	285	26	8-φ23	100	180	220	24	8-φ19
150QS-78	713.5	397	330	280	190	550	250	330	280	-	190	-	472.5	285	25	140	155	4-φ18	150	240	285	26	8-φ23	100	180	220	24	8-φ19
150QS-78A																												
150QS-50	713.5	397	330	280	190	550	250	330	280	-	190	-	455	285	25	140	140	4-φ18	150	240	285	26	8-φ23	100	180	220	24	8-φ19
150QS-50A																												
150QS-50B																												
200QS-95	850.5	475	330	280	190	680	330	330	280	-	190	-	555	355	25	170	170	4-φ18	200	295	340	24	8-φ23	125	210	250	22	8-φ19
200QS-95A																												
200QS-95B																												
200QS-63	743.5	409	330	280	190	620	300	330	280	-	190	-	547	355	25	170	170	4-φ18	200	295	340	24	8-φ23	150	240	285	24	8-φ23
200QS-63A																												
200QS-42	743.5	409	330	280	190	620	300	330	280	-	190	-	547	355	25	170	170	4-φ18	200	295	340	24	8-φ23	150	240	285	24	8-φ23
200QS-42A																												
250S-65	1100.5	612	510	450	330	880	400	620	550	-	430	-	856	510	40	240	300	4-φ27	250	350	395	28	12-φ23	150	240	285	26	8-φ23
250S-65A																												
250S-39	983.5	552	410	350	230	890	440	510	450	-	330	-	750	450	30	200	260	4-φ27	250	350	395	28	12-φ23	200	295	340	26	8-φ23
250S-39A																										335		
250S-24	983.5	517	410	350	230	850	400	510	450	-	330	-	738	4450	30	210	215	4-φ27	250	350	395	28	12-φ23	200	295	340	26	8-φ23
250S-24A																												
250S-14	892.5	485	410	350	230	745	330	510	450	-	330	-	709	450	30	210	215	4-φ27	250	350	395	28	12-φ23	200	295	340	26	8-φ23
250S-14A																												

单位 Unit：mm

型 号 Type	泵外形尺寸 Pump figure dimensions																	进水法兰尺寸 Inlet flange dimensions					出水法兰尺寸 Outlet flange dimensions				
	L	L_1	L_2	L_3	L_4	B	B_1	B_2	B_3	B_3'	B_4	B_4'	H	H_1	H_2	H_3	H_4	4-φd	Dg_1	Do_1	D_1	b_1	n-φd_1	Dg_2	Do_2	D_2	b_2	n-φd_2
300QS-90	1185	660	510	450	330	1080	470	620	550	-	420	-	898	510	40	268	325	4-φ27	300	400	440	28	12-φ23	200	295	340	26	8-φ23
300QS-90A																												
300QS-90B																												
300QS-58	1140	630	510	450	330	1070	530	620	550	-	430	-	852	510	40	240	310	4-φ27	300	400	445	28	12-φ23	250	350	395	28	12-φ23
300QS-58A																												
300S-58B																												
300QS-32	1100	605	510	450	330	880	410	620	550	-	430	-	824	510	40	260	270	4-φ27	300	400	445	28	12-φ23	250	350	395	28	12-φ23
300QS-32A																												
300QS-19	978.5	537	510	450	330	900	400	620	550	-	430	-	808	510	40	250	260	4-φ27	300	400	445	28	12-φ23	250	350	395	28	12-φ23
300QS-19A																												
300QS-12	1009	552	510	450	330	1000	500	620	550	-	430	-	808	510	40	256	265	4-φ27	300	400	445	28	12-φ23	300	400	445	28	12-φ23
300QS-12A																												
350QS-125	1431	801	580	500	360	1210	550	680	600	-	450	-	1080	620	50	330	410	4-φ34	350	460	505	30	16-φ23	200	295	340	26	12-φ23
350QS-125A																												
350S-125B																												
350QS-75	1272	710	600	500	360	1250	600	690	600	-	450	-	1017	620	50	274	356	4-φ34	350	460	505	30	16-φ23	250	350	395	28	12-φ23
350QS-75A																												
350S-75B																												
350QS-44	1233	675	580	500	360	1040	460	680	600	-	450	-	980	620	50	290	300	4-φ34	350	460	505	30	16-φ23	300	400	445	28	12-φ23
350QS-44A																												
350QS-26	1171	642	580	500	360	1040	460	680	600	-	450	-	963	620	50	290	300	4-φ34	350	460	505	30	16-φ23	300	400	445	28	12-φ23
350QS-26A																												
350QS-16	1129	622	580	500	360	1168	584	680	600	-	450	-	970	620	50	310	310	4-φ34	350	460	505	30	16-φ23	350	460	505	30	16-φ23
350QS-16A																												

单位 Unit：mm

型 号 Type	泵外形尺寸 Pump figure dimensions																	进水法兰尺寸 Inlet flange dimensions					出水法兰尺寸 Outlet flange dimensions				
	L	L_1	L_2	L_3	L_4	B	B_1	B_2	B_3	B_3'	B_4	B_4'	H	H_1	H_2	H_3	H_4	4-φd	Dg_1	Do_1	D_1	b_1	n-φd_1	Dg_2	Do_2	D_2	b_2	n-φd_2
400QS-90	1747	907	820	700	480	1645	900	900	700	-	500	-	1130	670	40	372	482	4-φ35	400	515	565	32	16-φ28	300	400	445	28	12-φ23
400QS-90A																												
400QS-90B																												
400QS-40	1747	907	820	700	480	1645	900	900	700	-	500	-	1130	670	40	372	482	4-φ35	400	515	565	32	16-φ28	300	400	445	28	12-φ23
400QS-40A																												
500QS-98	1639.5	912	760	580	420	1550	750	1020	800	-	580	-	1381	800	55	425	545	4-φ41	500	620	670	34	20-φ28	300	400	445	28	12-φ23
500QS-98A																												
500QS-98B																												
500QS-59	1639.5	907	760	580	420	1640	810	1020	800	-	580	-	1300	800	55	370	480	4-φ41	500	620	670	34	20-φ28	350	460	505	30	16-φ23
500QS-59A																												
500QS-59B																												
500QS-35	1363.5	756	760	580	420	1350	630	1020	800	-	580	-	1270	800	55	415	415	4-φ41	500	620	670	34	20-φ28	350	460	505	30	16-φ23
500QS-35A																												
500QS-22	1396.5	770	760	580	420	1460	640	1020	800	-	580	-	1266	800	55	410	410	4-φ41	500	620	670	34	20-φ28	400	515	565	32	16-φ28
500QS-22A																												
500QS-13	1308.5	714.5	760	580	420	1550	775	1020	800	-	580	-	1251	800	55	410	410	4-φ41	500	620	670	34	20-φ28	500	620	670	34	20-φ28
600QS-100	1935	1097	1200	1000	800	1900	900	1300	1000	-	700	-	1610	950	55	532	588	4-φ42	600	725	780	36	20-φ31	400	515	565	32	16-φ28
600QS-100A																												
600QS-100B																												
600QS-75	1694.5	940	940	760	600	1900	940	1020	800	-	580	-	1550	950	55	425	555	4-φ41	600	725	780	36	20-φ31	400	515	565	32	16-φ28
600QS-75A																												
600QS-47	1694.5	940	940	760	600	1595	745	1020	800	-	580	-	1505	950	55	490	490	4-φ41	600	725	780	36	20-φ31	400	515	565	32	16-φ28

单位 Unit：mm

型 号 Type	泵外形尺寸 Pump figure dimensions																	进水法兰尺寸 Inlet flange dimensions					出水法兰尺寸 Outlet flange dimensions				
	L	L_1	L_2	L_3	L_4	B	B_1	B_2	B_3	B_3'	B_4	B_4'	H	H_1	H_2	H_3	H_4	4-φd	Dg_1	Do_1	D_1	b_1	n-φd_1	Dg_2	Do_2	D_2	b_2	n-φd_2
600QS-32 600QS-32A 600QS-32B	1627.5	900	940	760	600	1600	750	1020	800	-	580	-	1490	950	55	480	480	4-φ41	600	725	780	36	20-φ31	500	620	670	34	20-φ28
600QS-22 600QS-22A	1466.5	805	940	760	600	1790	840	1020	800	-	580	-	1476	950	55	460	460	4-φ41	600	725	780	36	20-φ31	500	620	670	34	20-φ28
800QS-76	2750	-	1200	1000	-	2285	1000	-	1350	-	-	-	2105	1200	10	720	850	4-φ56	800	950	1015	42	24-φ33	-	-	-	-	-
800QS-76A	2500	-	1200	1000	-	2200	875	1200	1000	-	-	-	2074	1200	10	720	720	4-φ42	800	950	1015	42	24-φ33	600	725	780	40	20-φ30
800QS-32	2300	1220	1200	1000	-	2150	750	1200	1000	-	-	-	2044	1200	10	720	720	4-φ42	800	950	1015	42	24-φ33	-	-	-	-	-
800QS-22	2100	-	1200	1000	-	2100	750	1200	1000	-	-	-	2014	1200	10	720	720	4-φ42	800	950	1015	42	24-φ33	-	-	-	-	-
900QS-23	2730	1350	1200	1000	700	2400	840	1200	900	-	600	-	2400	1400	60	840	760	4-φ42	900	1050	1115	46	28-φ34	700	840	895	40	24-φ31
1000QS-36	3550	2000	1550	1400	1000	2900	1360	1900	1200	-	900	-	2750	1600	70	860	760	4-φ42	1000	1160	1230	50	28-φ37	800	950	1015	44	24-φ34
1200QS-22 1200S-22A 1200S-32 1200S-32A	3285	1695	1600	1250	900	2800	1250	550	725	1105	575	950	2650	1700	120	870	1020	4-φ48 4-φ56	1200	1380	1455	56	32-φ40	-	-	-	-	-
1200S-39 1200S-39A 1200S-39B 1200S-56 1200S-56A 1200S-56B 1200S-72	3295	1695	1680	1250	900	2800	1250	550	725	1105	575	950	2700	1700	120	870	1020	4-φ56	1200	1380	1455	56	32-φ40	-	-	-	-	-

Size and Performance Parameters of QS Pump

Pump Type	Q Flow		H Head	n Speed	N Power(kw)		η Eff	NPSH	Pump Weight (kg)
	(m3/h)	(L/s)	(m)	(rpm)	Shaft Power	Motor	(%)		
150QS-78	126 162 198	35 45 55	84 78 70	2900	40 45.8 51.0	55	72 75 74	5	150
150QS-78A	112 114 180	31 40 50	67 62 55	2900	30 33.8 38.5	45	68 72 70	5	150
150QS-50	130 170 220	36.2 47.2 61.2	52 47.6 35	2900	25.3 27.6 31.3	37	74 80 67	5	145
150QS-50A	120 144 180	31 40 35	43.8 40 35	2900	18.5 20.9 24.5	30	72 75 70	5	145
200QS-95	180 234 288	50 65 80	100 93.5 82.5	2900	79.1 85.0 88.6	110	62 71 73	5.5	245
200QS-95A	160 215 265	44.5 59.7 73.6	85.1 75.6 70.2	2900	60.8 64.2 71.4	90	61 69 71	5.5	265
200QS-63	213 288 351	60 80 97.5	69 62.5 50	2900	55 61.3 67.8	75	74 80 70.5	4.7 5.5 7	265
200QS-63A	180 270 324	50 70 90	54.5 46 37.5	2900	41 48.3 51	55	65 70 65	5.0 6.2 6.5	265
200QS-42	216 288 342	60 80 95	48 41.3 35	2900	34.9 38.1 40.2	45	81.85 81	5.0 6.4 8.2	219
200QS-42A	198 270 310	55 75 86	43 36 31	2900	30.5 33.1 34.4	37	76 80 76	4.8 5.8 7	219
250QS-65	360 486 612	100 135 170	71 65.1 56	1450	91.5 109 129.6	132	76 79 72	4	565
250QS-65A	342 468 540	95 130 150	61 54 50	1450	76.7 89.4 98	110	74 77 75	4	565

Pump Type	Q Flow		H Head	n Speed	N Power(kw)		η Eff	NPSH	Pump Weight (kg)
	(m3/h)	(L/s)	(m)	(rpm)	Shaft Power	Motor	(%)		
250QS-39	360	100	42.5	1450	55.5	75	75	4	428
	486	135	38.5		61.5		93		
	612	170	32.5		67.7		80		
250QS-39A	324	90	35.5	1450	40.2	55	78	4	428
	468	130	30.5		45.7		86		
	576	160	25		47.8		82		
250QS-24	360	100	27	1450	33.1	45	80	4	420
	486	135	23.5		36.2		86		
	576	160	19		36.4		82		
250QS-24A	342	95	22.2	1450	25.8	37	80	4	420
	414	115	20.3		27.6		83		
	482	134	17.4		28.6		80		
250QS-14	360	100	17.5	1450	21.4	30	80	4	405
	486	135	14		21.8		85		
	576	160	11		22.1		78		
250QS-14A	520	89	13.7	1450	15.4	22	78	4	405
	432	120	11		15.8		82		
	504	140	8.6		15.8		75		
300QS-90	590	164	98	1450	213	260	74	4.6	847
	792	220	90		245		80	5.5	
	936	260	82		279		75	6.5	
300QS-90A	576	160	86	1450	190	260	71	4.5	845
	755	220	78		217		74	5.3	
	918	260	70		246		71	6.4	
300QS-90B	540	150	72	1450	151	250	70	4.4	845
	720	200	67		180		73	5.1	
	900	250	57		200		70	6.2	
300QS-58	576	160	65	1450	128	180	80	5.5	572
	792	210	58		149		84		
	972	255	50		168		79		
300QS-58A	530	147	55	1450	99.2	155	80	5.5	572
	720	200	49		116		83		
	893	248	42		131		78		
300QS-58B	504	140	47.2	1450	82.5	135	79	5.5	572
	684	190	43		97.7		82		
	835	232	37		108		78		

Pump Type	Q Flow		H Head	n Speed	N Power(kw)		η Eff	NPSH	Pump Weight (kg)
	(m3/h)	(L/s)	(m)	(rpm)	Shaft Power	Motor	(%)		
300QS-32	612	170	38	1450	76.2	90	83	5.5	809
	792	220	32.2		79.8		87		
	900	258	25.5		78.1		80		
300QS-32A	550	153	31	1450	58.1	75	80	5.5	660
	720	200	26		60.7		84		
	810	225	20.5		58		75		
300QS-19	612	170	23	1450	47.3	55	81	5.5	660
	792	220	19.4		49.8		84		
	935	260	14		47.6		75		
300QS-19A	504	140	20	1450	34.8	45	79	5.5	660
	720	200	16		39.3		82		
	900	250	11.5		37.6		75		
300QS-12	611	170	14.5	1450	30.3	30	75	5.5	660
	792	220	12		31.2		80		
	900	250	10		33.1		77		
300QS-12A	522	145	11.8	1450	22.4	30	75	5.5	660
	685	190	10		233		80		
	792	220	8.7		24.4		77		
300QS-125	850	236	140	1470	450	680	72	6.5	1580
	1250	347	125		252		81		
	1663	461	100		620		73		
300QS-125A	800	223	125	1470	391	630	70	6.5	1580
	1180	328	112		426		78		
	1570	436	90		550		70		
300QS-125B	745	207	108	1470	313	500	70	6.5	1580
	1100	305	96		373		77		
	16460	405	77		422		72.5		
350QS-75	972	270	80	1450	268	400	79	6.5	1200
	1260	350	75		306		84		
	1440	400	65		319		80		
350QS-75A	900	250	70	1450	220	300	78	6.5	1200
	1170	325	65		247		84		
	1330	370	56		257		79		
350QS-75B	900	250	60	1450	175	250	78	6.5	1200
	1080	300	58		196		84		
	1260	350	54		213		79		

Pump Type	Q Flow		H Head	n Speed	N Power(kw)		η Eff	NPSH	Pump Weight (kg)
	(m3/h)	(L/s)	(m)	(rpm)	Shaft Power	Motor	(%)		
350QS-44	972	270	50	1470	164	220	81	6.5	1105
	1260	350	43.58		179		84		
	1480	410	37		188		79		
350QS-44A	864	240	41	1470	121	180	80	1105	1105
	1120	310	36		130		84		
	1330	370	30		136		80		
350QS-26	971	270	32	1450	99.7	132	85	6.5	880
	1260	350	26		102		88		
	1440	400	22		95.7		82		
350QS-26A	864	240	26	1450	76.5	110	80	6.5	880
	1120	310	21.5		77		85		
	1296	360	16.5		80		73		
350QS-16	971	270	20	1450	64.4	75	82	6.5	760
	1260	350	16.2		65.3		85		
	1440	400	13.4		70		75		
350QS-16A	864	240	16	1450	50.2	55	75	6.5	760
	1044	290	13.4		47.6		80		
	1260	350	10		48.3		71		
400QS-96	1080	300	98	1480	400	500	71.5	5.5	1910
	1260	350	96		428		77		
	1620	450	90		473		84		
400QS-96A	1080	250	85.5	1480	346	440	73	6	1910
	1260	300	85		376		79		
	1620	350	78		410		84		
400QS-96B	1080	300	78	1480	298	440	77	6	1910
	1260	350	76		318		82		
	1620	450	68		349		80		
400QS-96J	900	250	40	980	124	185	79	6	1910
	1080	300	40		140		84		
	1260	350	38		155.3		84		
400QS-96JA	900	250	37	980	112	155	81	5	1910
	1080	300	35		123		84		
	1260	350	32		131		84		
500QS-59	1150	430	66	970	340	500	82	6	2750
	2016	560	59		390		83		
	2450	680	50		433		77		

Pump Type	Q Flow		H Head	n Speed	N Power(kw)		η Eff	NPSH	Pump Weight
	(m3/h)	(L/s)	(m)	(rpm)	Shaft Power	Motor	(%)		(kg)
500QS-59A	1450 1910 2270	390 530 630	58 50 42	970	300 347 360	400	74 75 72	6	2750
500QS-59B	1763 1550 2016	490	42	970	273	355	74	6	2750
500QS-35	1550 2016 2410	430 560 670	40 35.1 30	970	206 219 247	280	82 88 80	6	2340
500QS-35A	1870	520	31	970	186	240	85	6	2340
500QS-22	1620 2016 2340	450 560 650	27 22 15	970	148 147 137	180	80 82 70	6	2010
500QS-22A	1296 1870 2016	360 520 560	23 17 14	970	111 108 101	130	73 80 76	6	2010
500QS-20	2500 3600 3800	694.4 1000 1055	24.5 21 20.4	745	238.3 248 255.9	340	70 83 82.5	4.5 5 5.2	3030
500QS-20A	2500 3600 3800	694.4 1000 1055	22 17.2 16	740	218.3 215 216.5	28	70 80 78	5 5.4 5.6	3030
500QS-13	1620 2016 2325	450 560 646	15.2 12.8 10.6	970	78.9 79 78	110	85 89 86	6	2000
600QS-75	2750 3420 3930	764 950 1092	80 71 60	960	689 727 730	900	87 91 88	8.7	4300
600QS-75A	2550 3168 3640	708 880 1010	64 61 53	960	516 585 610	710	86 90 86	7.5	4300
600QS-75B	2300 2800 3200	630 778 889	60 56 49	960	442 514 502	550	85 88 85	7.5	4300
600QS-39	2600	750	39	730	319	380	90	5.2	4300

Pump Type	Q Flow		H Head	n Speed	N Power(kw)		η Eff	NPSH	Pump Weight (kg)
	(m3/h)	(L/s)	(m)	(rpm)	Shaft Power	Motor	(%)		
600QS-15	2500	694	33.5	740	316.7	420	70	5	3210
	3600	1000	30		345.6		85	5.5	
	4000	1111	28.5		365		83	5.8	
600QS-47	2502	695	56	970	460	550	83	7.5	3200
	3168	880	47.4		465		88		
	3499	972	38		426		80		
600QS-47A	2700	750	48.5	970	434	450	83	7.5	1000
	3150	875	44		438		88		
	3600	1000	32		392		80		
600QS-32	2480	700	37	970	295	380	86	7.5	2550
	3170	880	32		310		87		
	3960	1100	22		279		85		
600QS-32A	2304	640	31.5	970	235	280	84	7.5	2550
	2880	800	27		228		89		
	3600	1000	20		231		85		
600QS-21	2500	694.4	24.5	740	238.3	340	70	5	3030
	3600	1000	21		248		83		
	3800	1055	20.4		256		82.5		
600QS-21A	2500	694.4	22	740	218.3	280	70	5	3030
	3600	1000	17.2		215		80		
	3800	1055	16		216.3		78		
600QS-22	2340	650	23.5	970	187	250	80	7.5	2500
	2880	800	21		195		84.5		
	3420	950	18		207		81		
600QS-22A	2340	650	17.5	970	145	185	77	7.5	2500
	2880	800	15.5		148		82		
	3420	950	13		154		78.5		
700QS-90	3715	1032	99.5	980	1157	1250	87	9.5	5800
	4700	1306	90		1252		92		
	4896	1360	87		1018		89.5		
700QS-90A	3420	952	84.5	980	929	1250	85	8	5800
	4336	1204	76.5		1005		90		
	4517	1255	74		1018		89.5		
700QS-90JA	2111	586.4	57.5	742	501	710	52	5	5800
	3600	1000	52		555		72		
	4248	1180	43.5		595		79		

Pump Type	Q Flow		H Head	n Speed	N Power(kw)		η Eff	NPSH	Pump Weight (kg)
	(m3/h)	(L/s)	(m)	(rpm)	Shaft Power	Motor	(%)		
700QS-90JB	2400	667	51	742	397	560	84	5	5800
	3000	833	47		431		89		
	3744	1040	39.5		474		88.5		
800QS-76	4400	1222	82	740	1128	15000	87	8	8000
	5500	1528	76		1250		91		
	6600	1722	68		1384		88		
800QS-76A	4160	1156	75	740	976	1400	86	7.5	8000
	5200	1646	69		1085		86		
	6200	1722	63		1222		87		
800QS-10	4680	1300	84	742	1216	1600	88	8.5	8300
	6330	1758	75		1405		92		
	7200	2000	67.5		1478		90		
800QS-10A	4470	1242	76.5	742	1060	1400	88	7.5	8300
	5760	1600	70		1194		92		
	6878	1910	61.5		1396		89		
800QS-10J	3960	1100	50	600	702	1000	77	6.5	8300
	5070	1408	47.5		785		84		
	6210	1725	44		862		87		
800QS-32	4700	1305	35	730	575	630	78	6.5	5100
	5500	1530	32.5		580		84		
	6010	1670	28.9		567		83.5		
	6460	1795	25.4		567		80.5		
800QS-32A	4550	1260	31	730	492	560	78	6.5	5100
	5310	1475	29		500		84		
	5800	1600	26.5		496		83.5		
	6250	1735	23		487		80.5		
800QS-32B	4170	1050	29	750	391	450	79	6.5	5100
	5000	1388	26		393		84		
	5450	1518	23.5		415		81		
1000QS-46	6600	1933	52	600	1222	1250	84	6	10000
	8250	2292	46		1174		88		
	9900	2750	37		997		80		
1000QS-46A	6000	1666	47	000	936	1250	80	6	1000
	7800	2167	41.5		1013		87		
	9000	2722	32		992		79		

Pump Type	Q Flow		H Head	n Speed	N Power(kw)		η Eff	NPSH	Pump Weight
	(m3/h)	(L/s)	(m)	(rpm)	Shaft Power	Motor	(%)		(kg)
1200QS-39	7200	2000	42.5	500	1023	1600	81.5	5.5	
	9000	2500	39		1092.4		87.5		
	10800	3000	33		1155		84		
1200QS-39A	6480	1800	38.5	500	849	1250	80	5.5	
	8100	2250	35		892.5		86.5		
	9720	2700	29		925		83		
1200QS-39B	5832	1620	34	500	675	1000	80	5.5	
	7290	2025	31		718		85.7		
	8748	2430	25.5		741		82		
1200QS-85	9360	2600	95.7	745	2903	3450	84	11	16000
	12240	3400	85		3147		90	12	
	14400	4000	70		3228		85	12.4	
1200QS-56	8640	2400	60.5	600	1763	2240	82	7.5	16000
	10800	3000	56		1871		88		
	12960	3600	47.5		1960		86		
1200QS-56A	7776	2160	54.5	600	1425	2000	81	7.5	15500
	9720	2700	50		1518		88		
	11664	3240	42		1597		84		
1200QS-32	8640	2400	35	600	992	1400	83	7.5	13000
	10800	3000	32		1082		87		
	12960	3600	6		1073		85.5		
1200QS-32A	7776	2160	32.5	600	834	1250	83	7.5	13000
	9720	2700	29		882		87		
	11664	3240	23		880		83		
1200QS-22	7920	2240	26	500	644	800	83	5.5	12500
	9612	2670	22		662		87		
	10800	3000	18		638		83		
1200QS-22A	7200	2000	23	50	534	710	85	5.5	12500
	9000	2722	20.5		575		86.2		
	10800	2800	17.5		585		82.5		

Construction

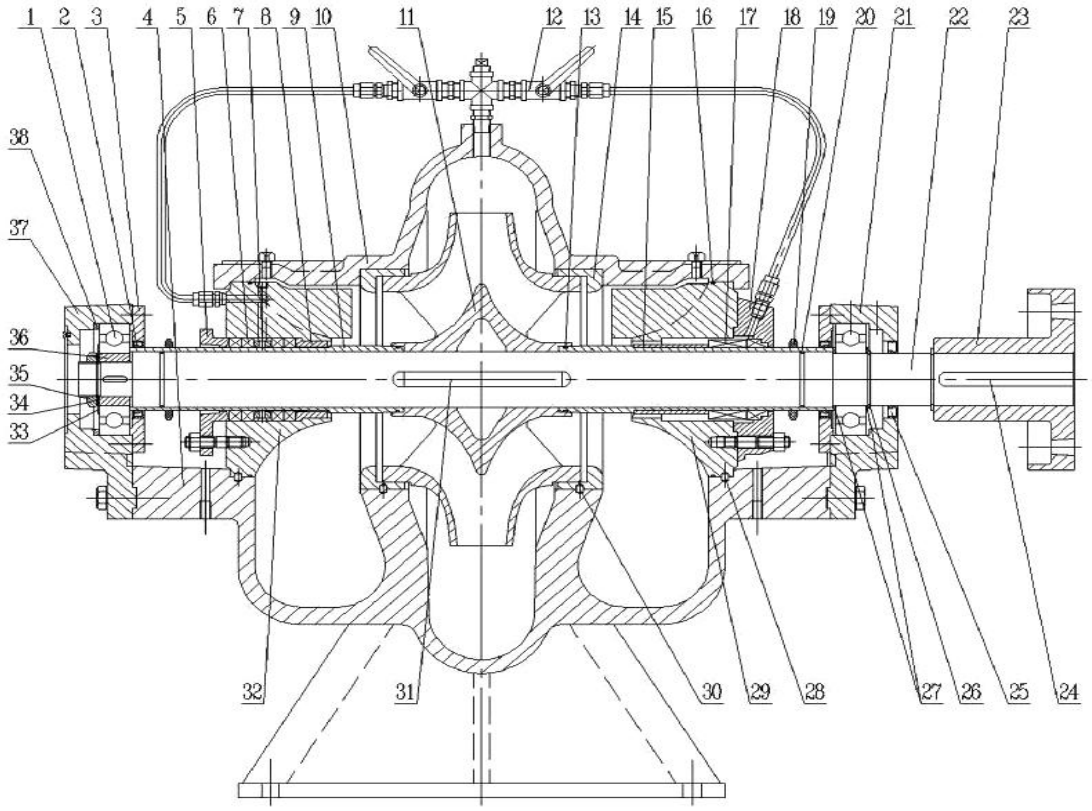

1	Bearing	2	Framework oil seal	3	Bearing gland
4	Pump casing	5	Packing gland	6	Packings
7	Packing ring	8	Packing sleeve	9	Shaft sleeve
10	Pump cover	11	Impeller	12	Washing pipe
13	O ring	14	Seal ring for pump casing	15	Mechanical seal liner
16	O ring	17	Mechanical seal	18	Mechanical seal gland
19	Water retaining ring	20	O ring	21	Bearing housing at driven end
22	Shaft	23	Couplings	24	C type key
25	Framework oil seal	26	Ring for shaft	27	Bearing junk ring
28	Cylindrical pin	29	Mechanical seal	30	Cylindrical pin
31	B type key	32	Packing seal	33	Seal
34	Round nut lock washer	35	Round nut	36	Bearing inner liner
37	Pump end bearing housing	38	Bearing spacer		

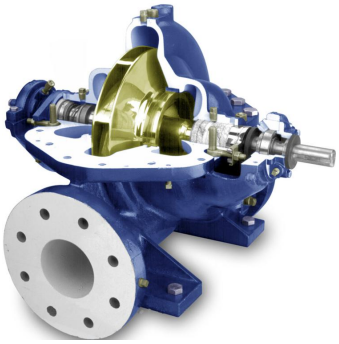

Both inlet and outlet of this pump are placed under the axial line, horizontally and vertical to the axial line, the pump casing is opened in the middle so it is unneccessary to remove the water inlet and outlet pipelines and motor(or other prime movers). The pump moves CW viewing from the clutch to it. The pump moving CCW can also be made, but it should be specially noted at order.

The main parts of the pump are: pump casing, pump cover , impeller , shaft, dual-suction seal ring, muff, bearing etc. and all of them, except the axle which is made of quality carbon steel, are made of cast iron. The material may be replaced with others upon different media.

The volute casing is split on the horizontal centerline with the suction and discharge nozzle cast integral with the pump casing. The upper casing is accurately located on the lower half by the use of dowel pins. The upper casing can be removed to inspect the interior of the pump without disturbing the pipe connections or pump alignment. The suction and discharge flanges contain tapped holes for vacuum and pressure gauge. At the bottom of the flanges, there are tapped plugs for water drainage.

The impeller is static-balance calibrated, fixed with the muff and the muff nuts in both sides and its axial position can be adjusted via the nuts and axial force gets balanced by means of the symmetrical arrangement of its blades, there may be residual axial force which is borne by the bearing at the axle end.

The pump shaft is supported by two single-column centripetal ball bearings, which are mounted inside of the bearing body on both ends of the pump and lubricated with grease. The dual-suction seal ring is used to reduce the leak at the impeller

The flexible couplings connect the pump with the motor directly. For pumps driven by belt, there must be an intermediate bracket fitted for supporting the belt pulley.

The close running fit between the wearing rings and the impeller minimizes the leakage of water back into the suction part. The rings protect the casing from wearing and can be promptly replaced with the spare parts when they have been worn out.

The shaft seal is soft packing. The stuffing ring is fit between the packing in order to prevent air from leaking into the pump and to cool and lubricate sealing case, and while the pump is working, a small amount of high-pressured water flows into the packing case through the concave notch on the pump cover to function as water seal.

The appropriate leakage from the packing case is at 10 to 20 drops per minute.

Manual

Assembly and Disassembly

1.assembly of the rotor's parts: in turn mount the impeller, muff, muff nut, packing sleeve, packing ring, packing gland, mechanical seal, mechanical seal bland, water retaining ring and bearing on the pump shaft, put on the dual-suction seal ring and then the clutch.

2.checking the outer circles of the impeller's seal and the muff on the rotor separately, the radial jumping of which should not be over the settings in the table (1).

3.mount the rotor on the pump casing and adjust the impeller to have its axial position in the middle of the dual-suction seal ring in both sides and then fixed, then fix the gland of the bearing's body with the fixing screws.

4.put on the packing (in case of a packing seal), the paper pad on the middle opened face and the pump cover and tighten the threaded-tail conical pin first and then cover's nut. Mount the packing gland, but do not press the packing too tightly, otherwise the muff may get heated to leave a bigger power consumption; while not too loose, or a big leak of liquid and reduced pump efficiency may result in . If mechanical seal is used, adjust compress capacity of mechanical seal to ensure no leak with it.After assembly, move the pump shaft with hand, it should be smooth and uniform without touch. Disassembly can be made with the steps contrary to above ones.

Installation

1.Check both pump and motor to see if any damages with them.

2.The installation height f the pump plus the hydraulic loss of the suck-in pipeline and its speed energy is just the NPSHa of the unit, which should bigger than NPSHr. The dimensions of the basis should be in line with those of installation of the pump unit.

3.Installation sequences:
(1).place the pump on the concrete basis with built-in foot bolts, correct the levelness with the method adjusting the wedge cushion block an d properly tighten the bolts to prevent them from displacement.
(2).Grout concrete e between the basis and the pump foot.
(3).After the concrete gets solidified, tighten the foot bolts and check the pump's levelness again.
(4).Correct the concentricity between the axles of both pump and motor to have them in a straight line. The allowed tolerance of the non-concentricity of the outer circles of two clutches is 0.1mm and the one of the non-uniform end-face intervals along with the circumference is 0.3mm(another correction of which after both water inlet and outlet pipelines are connected and a trial movement, the above requirements should also be met with).

Table(1)

Nominal Diameter	<50	50 - 120	120 - 250	250 - 500	500 - 800	800 - 1250
Jumping Capacity	0.03	0.04	0.05	0.06	0.08	0.10

Installation

(5).After finding out the rotating direction of the motor is identical to that of the pump, mount the link pin of the clutch.

4.Both water inlet and outlet pipelines should be supported by a separate stand and not by the pump body.

5.A good air tightness of the combined face between both pump and pipeline should be kept, especially the inlet pipeline, it must be guaranteed without air leak and without the possibility for air to be nested on the unit.

6.In general, a foot valve can be mounted if the pump is mounted above the water Level of the water inlet so as to start the pump with priming, it can also use the way of vacuum pump water leading.

7.In general gate valve and check valve are required to be mounted in the water outlet pipeline of the pump(unnecessary for those of a head less than 20m), with the check valve mounted after the gate valve.

The above ways of installation mean the pump without a common foundation. For the pump with a common foundation, use the wedgeiron- pad between both foundation and concrete to correct the levelness of the unit, then grout concrete between them. The installation principle and requirements are the same as those for the pump without a common foundation.

Start,Stop &Operation

1.Start and stop

(1).Before starting, move the rotor of the pump, which should be felt light, smooth and uniform.
(2).Close the water outlet valve, prime water into the pump (lead water by extracting with a vacuum pump in case of no foot valve). Ensure the pump full of water and no air nested inside of it.
(3).First close the plug of a vacuum or pressure meter, if so mounted on the pump, connected to the pump before starting the motor and then open it when the motor move in the normal speed; next, gradually open the water outlet gate valve and make it smaller in case of a large flowrate or bigger or bigger on the contrary.
(4).Uniformly tighten the pressing nut on the packing gland to have liquid leak in drops and pay attention to the temperature rise outside of the packing cavity.
(5).When to stop the pump, first close the plug of the vacuum or pressure meter and the gate valve on the water outlet pipeline, then cut off the power of the motor. Open the square screw plug on the lower side of the pump casing to let the residual water out to prevent frozen cracking in case of a lower ambient temperature.
(6).If it will stop for a long time, the pump must be disconnected and all the parts should be kept dry, and smeared on the machining face with rust-proof grease oil.

Start,Stop &Operation

2.Running

(1)The maximum temperature of the pump's bearing must not be over 75℃

(2)It is proper for the volume of the calcium-based grease lubricating the bearing to hold a space inside of the bearing body by 1/3 to 1/2.

(3) Properly press the packing gland in case of a little bit wear and replace it in case of too much wear.

(4)Take a periodic check of the elastic clutch and take care of the temperature rise with the motor's bearing.

(5)During running, stop it at once when noise or other abnormal sound is heard to find the cause and settle it.

(6) Do not raise the pump speed at will, but lowering it is allowed.

For instance, with this type of pump, the rated rotating speed is n, flowrate is Q, head is H, axle power is N, lowered speed is n1, the flowrate, head and axle power after speed lowering are Q1, H1 and N1, respectively. Make conversion by means of the following formula

$$Q_1=\left(\frac{n1}{n}\right)Q$$

$$H_1=\left(\frac{n1}{n}\right)^2 H$$

$$N_1=\left(\frac{n1}{n}\right)^3 N$$

Pump Show









Failures Causes and Trouble shooting

Failure	Causes	Troubleshooting
Pump not suck water, indicator of pressure and vacuum meters severely jumps.	1.Injected water insufficient 2. Leak occurs with pipeline or meter.	1. Inject more water; 2. Tighten or block up the leak point
Pump not suck water, high vacuum is shown on vacuum meter.	1. Foot valve not opened or blocked up; 2.Too big resistance with suction pipeline; 3. Too high water-suction height.	1. Correct or replace foot valve; 2. Rinse or replace pipeline 3. Lower the height.
No water out of pump, pressure is shown on pressure meter.	1.Too big resistance with water outlet 2. Too big resistance with water outlet 3. Impeller blocked up; 4. Rotating speed not enough.	1. Check or shorten pipeline; 2. Correct the direction of motor; 3. Clean it; 4. Check power voltage and raise the speed.
Flowrate insufficient or too low head	1. Impeller or both water inlet and outlet pipelines blocked up; 2. Too much wear with dual-suction seal ring or impeller damaged; 3. Rotating speed is lower than the set value.	1. Clean impeller or pipeline; 2. Replace it; 3. Adjust it to the rated value.
Too large consumption of power by pump	1.Too tightly pressed packing; 2.Friction between impeller and dual-suction seal ring ; 3. Too large flowrate.	1.loosen the packing gland 2. Check the cause to remove it; 3. Reduce the opening gate valve.
Abnormal sound inside of pump, no water goes upward into pump.	1.Too big resistance with suction pipeline; 2. Too high suction height; 3. Air is sucked into the water suck-in place; 4. Too high temperature with the liquid being sucked; 5. Steam loss occurs due to a too large flowrate.	1. Make up suction pipeline and foot valve; 2. Lower it; 3. Check foot valve, lower suction height, block up the air leak place; 4. Lower it; 5. Adjust water outlet gate valve to have it run within the set range of performance
Abnormal vibration with pump.	1. Steam loss occurs with it; 2. Impeller is unbalanced; 3. Both pump and motor axles are not concentric; 4. Foot stud loose.	1. Adjust the valve to have it run within the set range of performance; 2. Take static correction for impeller; 3. Correct the concentricity; 4. Tighten it.
Bearing over heated.	1.Lack of oil inside of it; 2. Lack of oil inside of it;	1. Check and clean bearing body, lubricate it; 2. Check and clean bearing body, lubricate it;

Application



Sixteen Sets QS300&QS350 split casing pumps application for water treatment plant in Swedish.



Twenty sets QS600&QS350 split casing pumps application for iron mining in Indonesia.



Fourteen sets QS150&QS200&QS300 split casing pumps application for juice plant in Thailand.



Eight sets of split casing pumps QS200 & QS300 & QS50, application for a small water conservancy project in Pakistan, six sets on working, and two sets for spare.